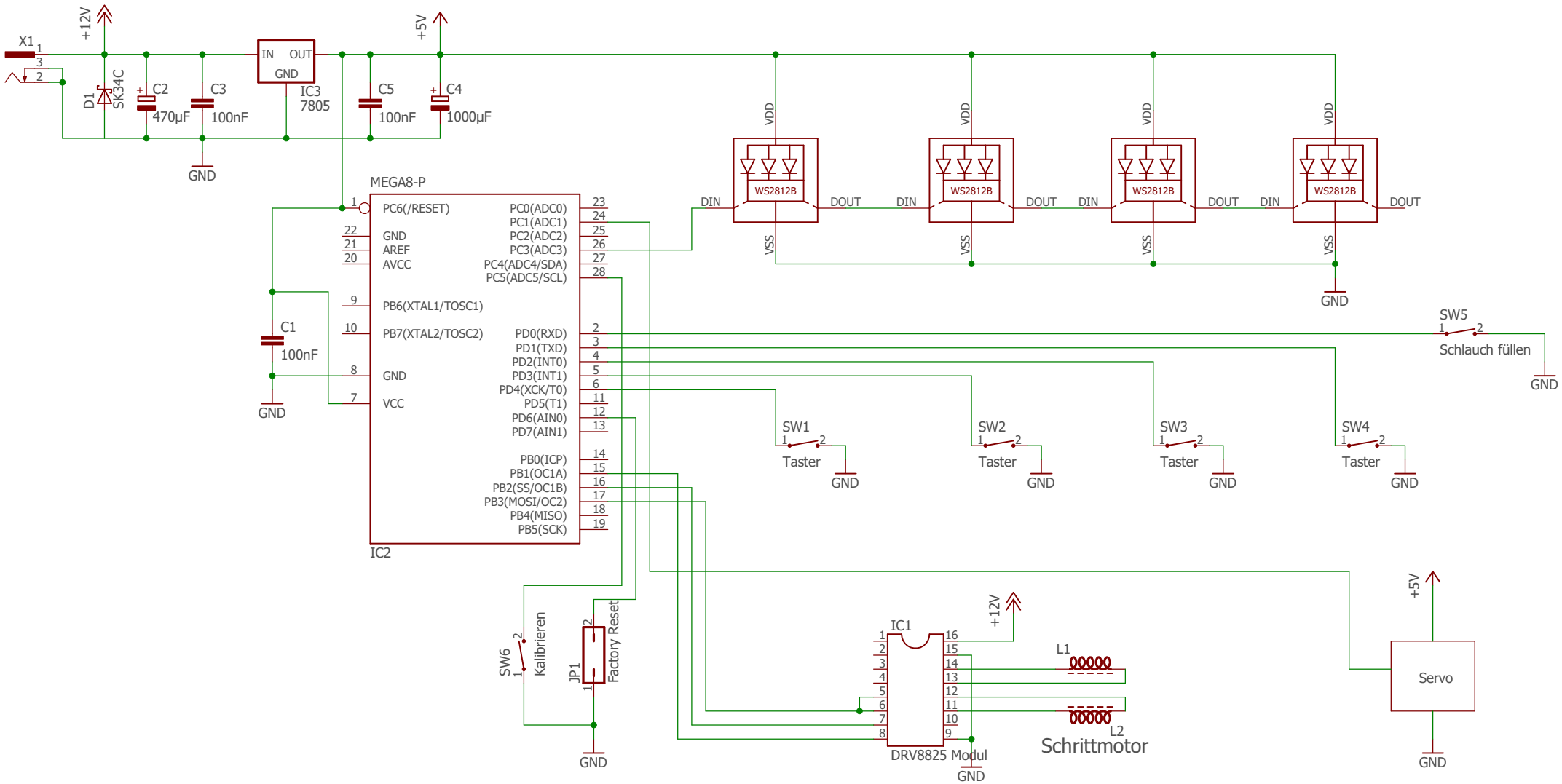
X1
+12V
D1
SK34C
C2
470µF
C3
100nF
IN
OUT
GND
IC3
7805
C5
100nF
C4
1000µF
+5V
GND
MEGA8-P
PC6(/RESET)
GND
AREF
AVCC
PB6(XTAL1/TOSC1)
PB7(XTAL2/TOSC2)
GND
VCC
PC0(ADC0)
PC1(ADC1)
PC2(ADC2)
PC3(ADC3)
PC4(ADC4/SDA)
PC5(ADC5/SCL)
PD0(RXD)
PD1(TXD)
PD2(INT0)
PD3(INT1)
PD4(XCK/T0)
PD5(T1)
PD6(AIN0)
PD7(AIN1)
PB0(ICP)
PB1(OC1A)
PB2(SS/OC1B)
PB3(MOSI/OC2)
PB4(MISO)
PB5(SCK)
IC2
C1
100nF
GND
VDD
WS2812B
DIN
DOUT
VSS
GND
SW5
Schlauch füllen
GND
SW1
Taster
SW2
Taster
SW3
Taster
SW4
Taster
GND
SW6
Kalibrieren
JP1
Factory Reset
GND
IC1
+12V
L1
L2
Schrittmotor
DRV8825 Modul
GND
+5V
Servo
GND